Operator's Handbook

'Slip on' Fire Fighting Units

MODEL STF0400CS
MODEL STF0500C
MODEL STF0600C
MODEL STF800C
MODEL STF1000C
MODEL STF1200C
MODEL STF1500C
MODEL STF2000C

ASK YOUR DEALER ABOUT THE FULL RAPIDSPRAY RANGE AND OUR 44 PAGE CATALOGUE

CUSTOMER SERVICE FREECALL

1800 816 277

FROM MOBILE PHONES PLEASE CALL 03 5866 3266

RapidSpray
Reliable innovations

Contents

Introduction & Warnings……..3

Risk Assessment…….……4

Operating Instructions …….……5

Start up Procedure……6

Decontamination and Maintenance……..6

Quick Fill Unit……7

Exploded Diagram –Pump……8

Tank Line Drawing……..9

Warranty……..10

Warranty Registration Card……..12

READ YOUR OPERATOR'S HANDBOOK CAREFULLY BEFORE MOUNTING AND USING YOUR SPRAYER. KEEP YOUR HANDBOOK IN A SAFE PLACE.

Introduction

Congratulations on your purchase of a Rapid Spray Motorised Fire-Fighting Unit which is complete and ready to slip onto a Ute or Truck.

Warnings

! **1.** When mounting to any vehicle ensure that you have read the Vehicle Owner's Manual and that you comply with all the weight restrictions as specified by the vehicle manufacturer, as overloading can cause injury or death.

! **2.** To ensure your own safety and that of your employees if applicable you must comply with all relevant environmental, work place health and safety legislation and codes of practice. In particular, be aware of Rural Fire Service guidelines for safety when fighting fires or backburning.

! **3.** Select and wear appropriate Personal protection Equipment in accordance with the label of the product you intend using and your own safe work practices.

! **4.** Once the spraying operation has been completed, decontaminate the tank and spray accessories. Dispose of tank rinsings in compliance with current environmental, work place health and safety regulations.

! **5.** Improper or careless use of this sprayer can cause serious injury. Minors should never be allowed to use this sprayer. This sprayer should not be used when bystanders or animals are in the area. This sprayer should never be used while children are in the area.

! **6.** Never leave the sprayer unattended without turning off the engine and relieving the line pressure, and flushing the sprayer of any harmful chemicals.

! **7.** You must be in good mental health to operate this sprayer and not be under the influence of alcohol or any drugs that could impair your vision, physical strength, dexterity, judgment, or other mental capacity

! **8.** All operators must be trained in safe use of this unit

PRODUCT INFORMATION RISK ASSESSMENT SHEET FIELD SPRAYERS & FIRE FIGHTERS

Task	Hazards	Risk	Control Measures
1. Partially fill the tank with water, start the motor & test the spray unit	Manual handling; slips, trips or falls; petrol; fumes; fingers jammed	med	Concentrate on task; follow safe manual handling techniques:- don't lift on your own if > 20kg, bend knees & keep back straight; keep fingers clear; keep unit at least 8m away from overhead powerlines; fire extinguisher nearby; follow warning stickers on tanks; wear PPE for petrol & fumes-mask & gloves.
2. Check weather conditions & select the appropriate PPE to suit the chemicals to be used	Manual handling; slips, trips or falls	Low	Put on PPE as per the chemical requirements in the Material Safety Data Sheet-coveralls, gloves, safety footwear, glasses & respirator; follow safe manual handling techniques:-don't lift on your own if >20kg, bend knees & keep back straight.
3. Mix chemicals (if applicable) & fill spray tank/fire fighting units	As above; spray drift, chemical spillage, emission of vapors or flammability; weather; untrained visitors	Med	As above; user trained in the state's chemical mixing & administration course eg Chem. Cert; follow the relevant Environment Protection Authority requirements; fire extinguisher present; keep visitors away from the job unless wearing full PPE.
4. Use spray or fire fighter units.	As above; loss of load; heat & cold; noise; exceed load limit of vehicle; hose entanglement; exhaust fumes; terrain & slopes; run over by unit	High	As above; wear clothes to suit heat & cold; wear hearing protection if noise > 85 dBa; follow the manufacturer's safe operation instruction for the vehicle and the spray unit; don't overload - water weighs 1kg for every 1 litre; secure load to vehicle; keep hose tidy; put unit brakes on.
5. Clean up, maintenance & storage	As above	Low	As above; continue to wear PPE for clean up: store unit in a dry, well ventilated area.

Operating Instructions

Before Use

1. Check all hoses, connections and hose clamps to ensure that the unit has been delivered to you without transportation loss or damage.

2. Before attempting any spraying with your new unit, operate it with water only to familiarize yourself with its features and capabilities and to ensure that your sprayer has arrived in a safe working condition. Please contact your dealer immediately should anything appear to have been damaged.

3. Load the Fire Fighting unit onto the back of a vehicle and fasten the unit securely to the vehicle by strapping or bolting it down. Ensure that the straps do not interfere with any hoses or connections. Do not place the straps over the pump or engine. Keep hoses and straps away from hot engine, exhaust and exhaust fumes.

4. Prepare the engine for use as per the engine manual supplies with your sprayer. Ensure that the correct quantity and type of oil is used when filling the engine.

Operation

1. Fill tank from appropriate water source. Open ball valve on suction hose at bottom of tank. Start motor and allow to warm up. Bypass valve is fitted to the top of the pump and should be adjusted to allow bypass for warm-up period.
2. Unlock hose reel to allow hose to be pulled out. When using the fire fighter adjust the nozzle to desired spray pattern. Increase engine speed and adjust bypass to achieve desired flow rates. When job is finished turn engine off, rewind hose onto reel and lock reel to prevent unwinding. Close ball valve on suction hose.

Please note that the unit is designed for fire fighting use and not for chemical spraying.
Please consult the manufacture for further information.

Start Up Procedure

Prepare the engine for start up as per the engine manual and pump manual.

Add the spray solution to the tank (See “Mixing and Filling”).

Ensure that the pressure regulator lever is in the ‘open’ position and the pressure adjusting knob is screwed out (anti-clockwise). Failure to do so will invalidate pump warranty.

Start the engine and allow it to warm up. Run the pump with the regulator lever in the BY PASS position in order to discharge entrapped air from the system for at least two minutes before changing the regulator to the closed position. (Rotate clockwise)

To set the correct spraying pressure, open the flow through the hand gun (discharge solution back to tank) and turn the pressure regulator knob in a clockwise direction until the required pressure is achieved. Spray nozzle pressure will vary according to hose length, nozzle size, etc. When the hand gun is released the increased pressure in the system will be automatically adjusted by the pressure regulator valve and excess flow will be returned to the spray tank.

Decontamination and Maintenance

1. After use the sprayer must be thoroughly decontaminated, inside and out, to prevent damage to the unit from corrosion or abrasion. .

2. When storing the unit ensure that it is clean and dry and store in a well ventilated place.

3. If operating in areas where freezing occurs we recommend leaving anti-freeze in the pump, regulator and handgun while not being used to prevent possibility of frost damage.

Quick Fill Unit

Aussie pumps are designed for sucking water directly out of dams. The quick fill unit is a quick, environmentally safe way of sucking up water to fill the water tank.

When using the quick full unit, detach the suction line connected to the pump and place it on the discharge outlet directly above. Attach the camlock fitting on the 'quick fill kit' to the suction line of the pump, and lower the opposite end with the filter into the external water source. Prime the pump by placing water in the outlet on the top of the pump.

Open the tap on the outlet of the water tank and start the engine.

Ensure water is being sucked in by the pump and discharged into the tank.

Exploded diagram – Internal Parts

QP PUMPS PARTS PRICE LIST

QP205SE/GX160 (3 Way, 2" & 2.5" Elbow)

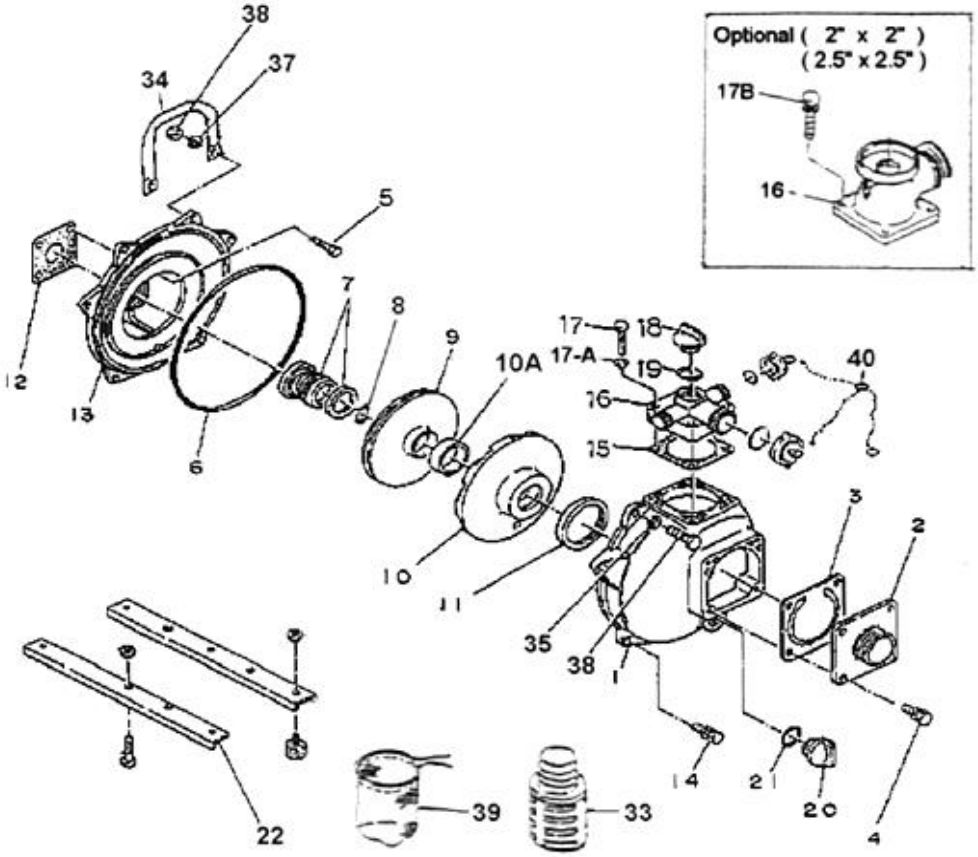

INDEX

No.	Parts No.	Parts Name	Qty
1	4364-100010	Casing	1
2	1803-100160	Suction Cover 2"	1
2	4725-060160	Suction Cover 1.5"	1
2	4904-000160	Suction Cover 2.5"	1
3	1378-350350	Check Valve	1
3	1378-350350V	Check Valve Viton	1
4	018105-0825	Bolt Set With Spring Washer	4
5	019115-0525	Bolt	4
6	048935-2550	O-Ring Casing	1
6	048935-2550V	O-Ring Casing Viton	1
7	080311-2320	Mechanical Seal	1
7	080311-2320NIT	Nitrile Mech Seal	1
7	080311-2320V	Viton Mech Seal	1
7	080344-2320	Silicon Carbide-Heavy Duty	1
8	085282-1600	Adjust Liner	1,2
9	1806-060030	Impeller P Shaft (37mm boss)	1
9	1803-060030	Impeller W Shaft (18mm boss)	1
9	2242-060030	Diesel Eng Impeller	1
10	1803-100130	Volute Casing	1
10A	1803-521220	Liner Ring	1
11	1378-330620	Volute Casing Packing	1
11	1378-330620V	Volute Casing Packing Viton	1
12	1211-390610	Casing Cover Packing	1
13	9358-100020	Casing Cover - P Type	1
13	1378-100020	Casing Cover - W Type	1
14	018105-0825	Bolt Set With Spring Washer	4

No.	Parts No.	Parts Name	Qty
15	1803-330360	Delivery Cover Packing	1
15	1803-330360V	Delivery Cover Packing Viton	1
16	1814-100090	Delivery Cover(3way Outlet)	1
16	1803-000090	Delivery Elbow 2"	1
16	4904-000090	Delivery Elbow 2.5"	1
17	010505-0845	Bolt	4
17A	045125-0080	Spring Washer Outlet	1
17B	018105-0825	Bolt 2" Delivery Elbow	4
18	063121-1100ASSY	Flooding Cap/O-Ring	1
19	048035-0300	O-Ring (Flooding Cap)	1
19	048035-0300V	O-Ring Viton Drain Cap	1
20	063121-1100ASSY	Drain Cap/O-Ring	1
21	048035-0300	O-Ring(Drain Cap)	1
21	048035-0300V	O-Ring Viton Flooding Cap	1
22	QSKIDSET	Skid Set	1
33	QSTRAINER 2"	Strainer	1
34	1806-207101	Handle	1
35	045125-0080	Spring Washer	2
36	010105-0845	Bolt	4
37	045125-0080	Spring Washer	1
38	020545-0080	Nut	2
39	092031-2013	Nylon Net	1
40	QCAPS&CHAINS	Cap & Chains	1
	Q205SREJ	Rejuvenation Kit	1
	Q205SREJV	Viton Rejuvenation Kit	1
	Q205SEREJNIT	Nitrile Rejuvenation Kit	1

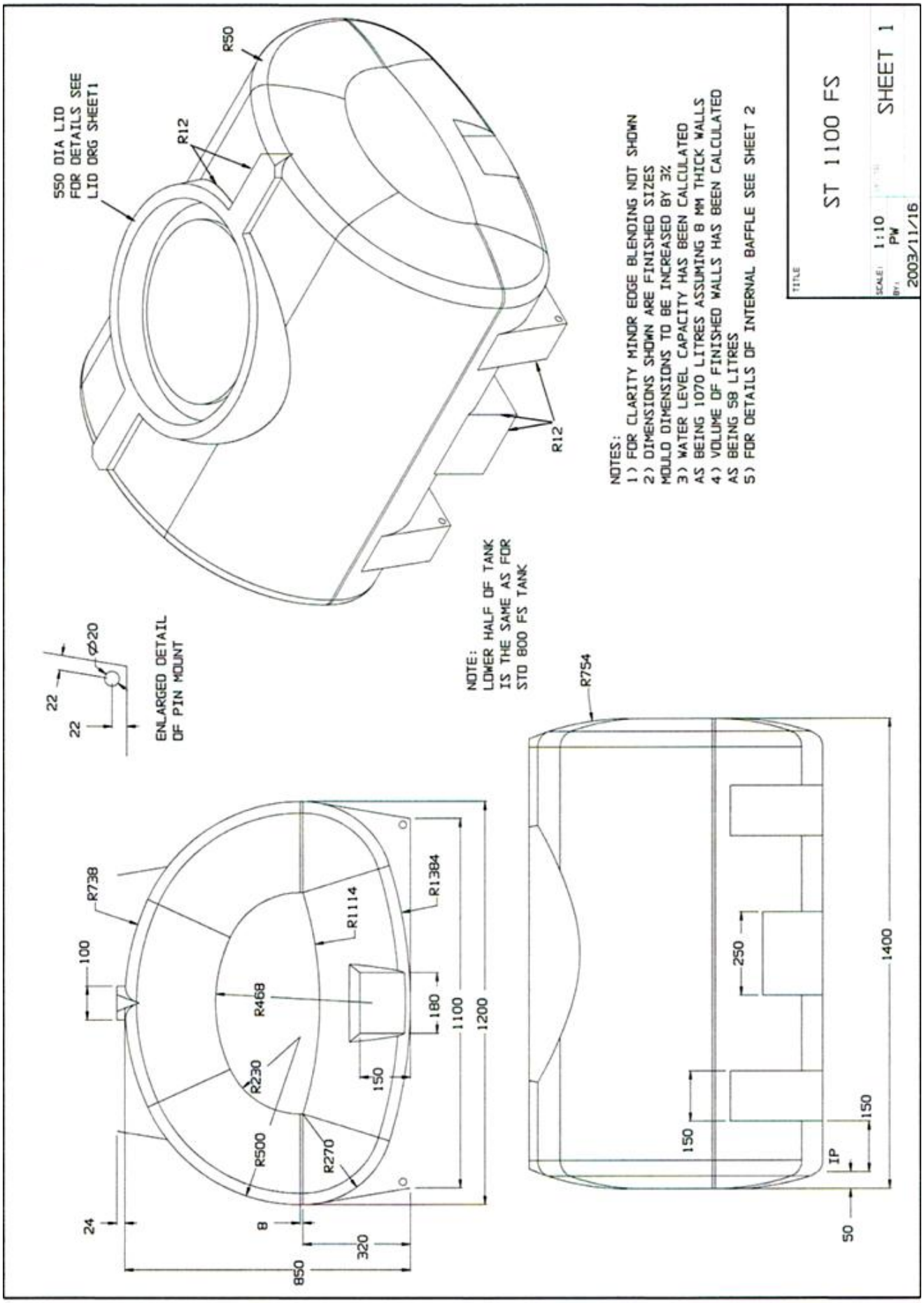
550 DIA LID
FOR DETAILS SEE
LID DRG SHEET1
R50
R12
R12
NOTES:
1) FOR CLARITY MINOR EDGE BLENDING NOT SHOWN
2) DIMENSIONS SHOWN ARE FINISHED SIZES
MOULD DIMENSIONS TO BE INCREASED BY 3%
3) WATER LEVEL CAPACITY HAS BEEN CALCULATED
AS BEING 1070 LITRES ASSUMING 8 MM THICK WALLS
4) VOLUME OF FINISHED WALLS HAS BEEN CALCULATED
AS BEING 58 LITRES
5) FOR DETAILS OF INTERNAL BAFFLE SEE SHEET 2
TITLE
ST 1100 FS
SCALE: 1:10
BY: PW
2003/11/16
SHEET 1
NOTE:
LOWER HALF OF TANK
IS THE SAME AS FOR
STD 800 FS TANK
Ø20
22
22
ENLARGED DETAIL
OF PIN MOUNT
R754
R738
100
R1114
R1384
R468
180
1100
1200
R230
150
R500
R270
24
8
320
850
250
1400
150
150
IP
50

Warranty

This Fire Fighting unit has been guaranteed free from defect in materials, workmanship or manufacture for 12 months from the date of purchase. Any parts which appear to us to be defective either in material or workmanship will be replaced or repaired at no cost to the purchaser, subject to the following conditions:

1. The registration card enclosed in this handbook must be returned to us within 7 days of purchase
2. The guidelines in this handbook have been adhered to in every respect.
3. In unlikely event of sprayer failure, this should be reported to your dealer who will act on your behalf to resolve the issue to your satisfaction.
4. Any defective parts will be returned by your dealer within 7 days of failure, together with a report describing the failure and conditions in which the failure occurred.
5. The following are specifically excluded from the terms of warranty –
    - Fair wear and tear to pump moving parts and diaphragms
    - Fair wear and tear to nozzles and nozzle bodies
    - Damage caused by neglect or lack of lubrication
    - Damage caused by misuse or abuse
    - Damage caused while the sprayer is in transit

Manufactured by:
Rapid Spray Southern
Murray Valley Hwy
Nathalia VIC 3638
AUSTRALIA
FREECALL: 1800 816 277

Whist every care has been taken in the preparation of these instructions, no liabilities can be accepted with regard to errors or omissions. Product specifications are subject to change in line with our commitment to continuous improvement

WARRANTY REGISTRATION CARD

To validate your warranty, please complete all the details below and post this card.
I have read and understood these instructions.

Sprayer Model _____ Date purchased _____/ _____/_____

Serial Number_____

Purchased from _____

(Dealer Name and Town)

Purchaser's Name _____

Purchaser's Address

_____

_____p/c_____

___

Purchaser's Signature _____

To help us help you further please complete the following –

Purchaser's Age

O Up to 25
O 25 – 40
O 41-55
O Over 55

Principle Usage

O Commercial Farm
O Hobby Farm
O Industrial
O Home
O Town Council
O Hire Company
O Other

What influenced you to purchase a Rapid Spray product?

O Catalogue received
O Newspaper Advertisement
O Dealer recommendation
O Friend's recommendation
O Better features than other sprayers
O Quality and reliability
O Price
O Past experience with Rapid Spray products

What other Rapid Spray/Rapid Plas products do you use?

O Animal Feeders/Waterers
O RainWater Tanks
O Spray Tanks
O Diesel Tanks
O Inter Knapsacks
O Boom Sprayers
O Bertolini Pumps and Controllers
O Fire Fighters

Rapid Spray Southern
Murray Valley Hwy, Nathalia VIC 3638
PO Box 137, Nathalia VIC 3638
FREECALL: 1800 816 277 FAX: 03 5866 3019
www.rapidspray.com
warranty@rapidspray.com